Turn your *phone or tablet*

Our guides are best viewed in landscape if you're viewing on your phone or tablet.

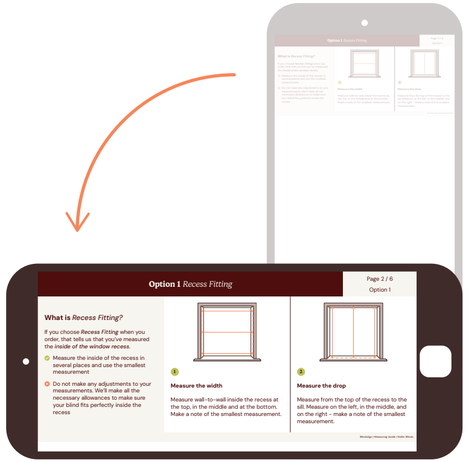

Designed for *DIY*

Our Roller Blinds are designed to be installed by you, without specialist fitters, even if you don't have much DIY experience.

Please read each page of this guide carefully during installation, following along one step at a time.

Check out our *video guide*

Click or tap the thumbnail above to watch our handy video overview. This video covers the basics, but for more detailed instructions just keep reading...

Before You Start *Choose the Correct Guide*

Did you *upgrade?*

There are a number of different finishes and options available for our Roller Blinds, so take a moment to ensure you're reading the right instructions for your blind. Just click or tap on the guide that matches your choice.

***This guide is for roller blinds either without upgrades, or with the SmartView electric upgrade*. If that matches what you've ordered then you can skip this page.**

Decorative Cassette Upgrade

Twist2Go No Drill Upgrade

Section 1 *Parts & Tools* - **Standard**

Tools required *for this install:*

- Handheld drill
- 4mm masonry drill bit
- Phillips screwdriver / driver bit
- Mallet / hammer
- Pen / pencil

Parts included *in your order:*

1. **Roller Blind**
2. **Child Safety Clip**
3. **Mounting Brackets**
4. **Screws & Wall Plugs**

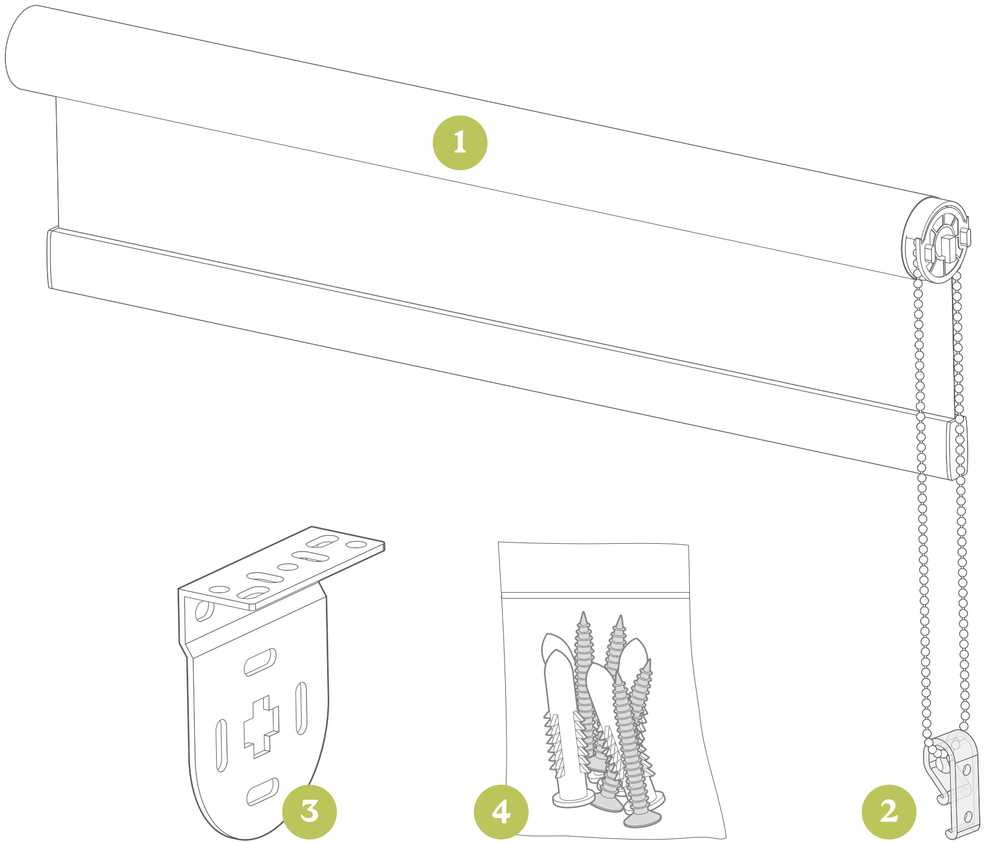

Section 1 *Parts & Tools* - **SmartView Electric Upgrade**

Parts included *in your order:*

Electric upgrade only

1. USB-C Plug-In Charger
2. SmartView ID Tag

Solar Charging upgrade only

3. USB-C Solar Charger
4. Solar Charger Brackets
5. Screws & Wall Plugs

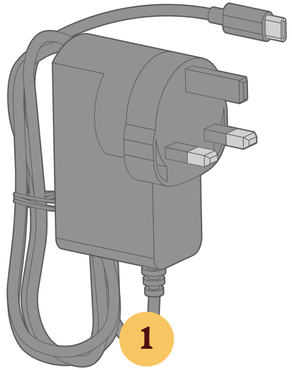

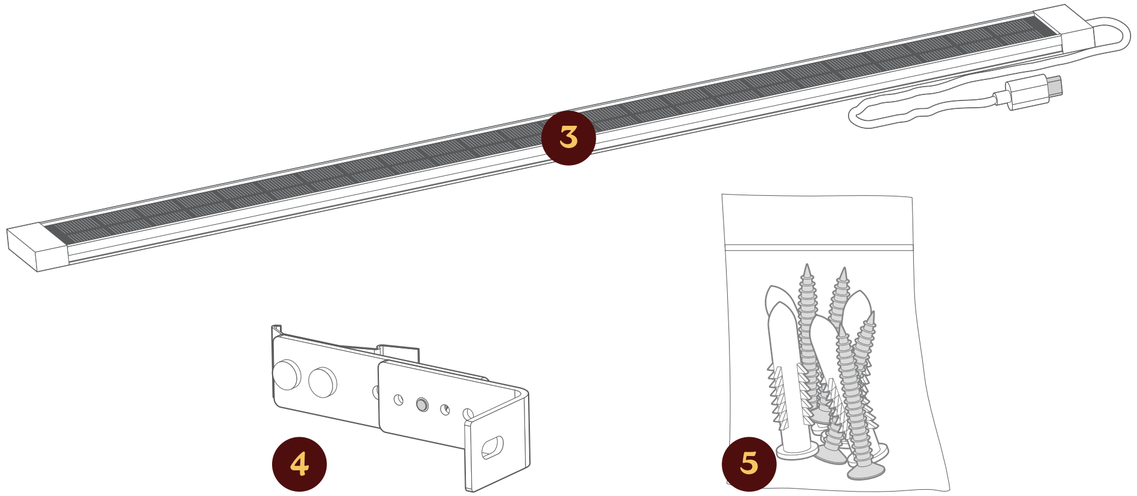

Section 2 *Installing the Brackets*

Tools required *for this section:*

- Handheld drill
- 4mm masonry drill bit
- Phillips screwdriver / driver bit
- Mallet / hammer
- Pen / pencil

Parts required *for this section:*

Mounting brackets

Screws & wall plugs

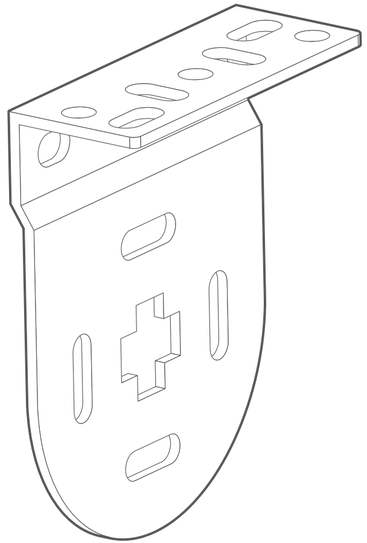

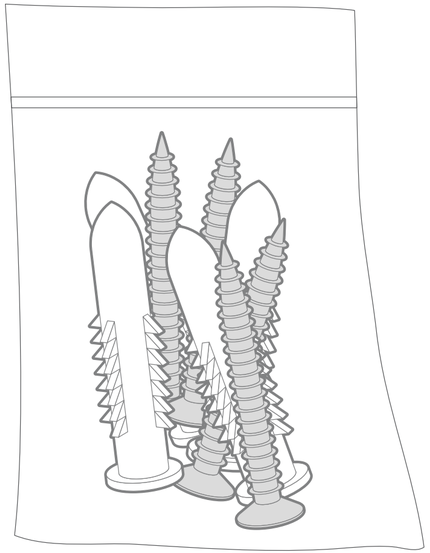

Section 2 *Installing the Brackets*

First, choose the method you'll be using to install your brackets:

Inside the recess

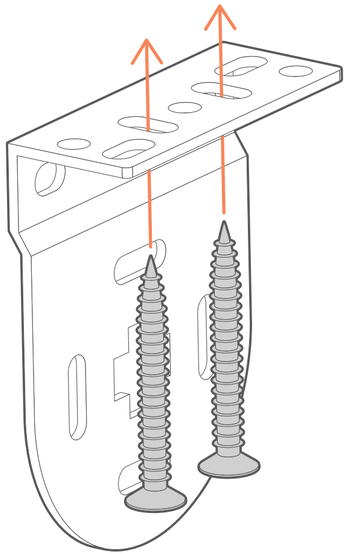

Top fixing
Screw the brackets into the top of the recess.

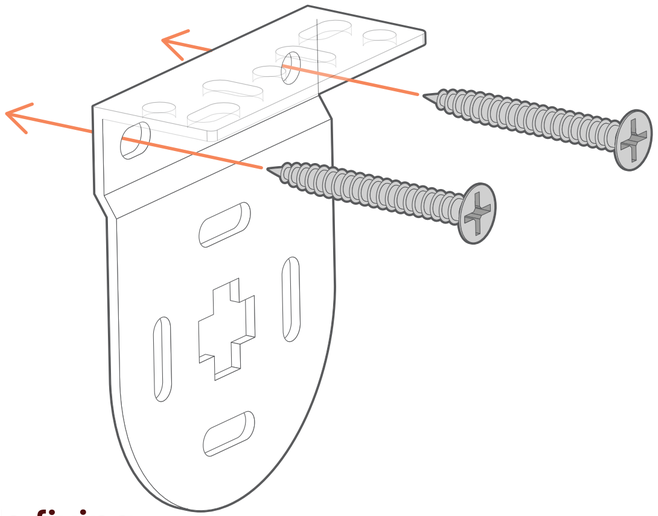

Side fixing
Screw the brackets into the side walls of the recess.

Outside the recess

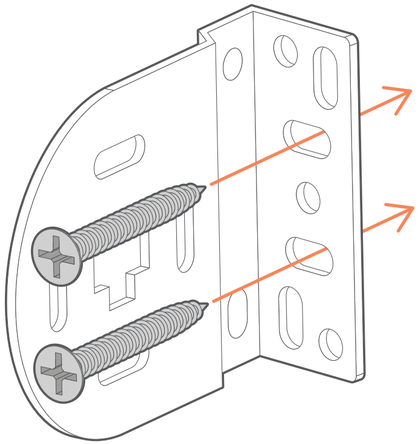

Face fixing
Screw the brackets into the wall above the recess.

Section 2 *Installing the Brackets* **- Top-Fixing**

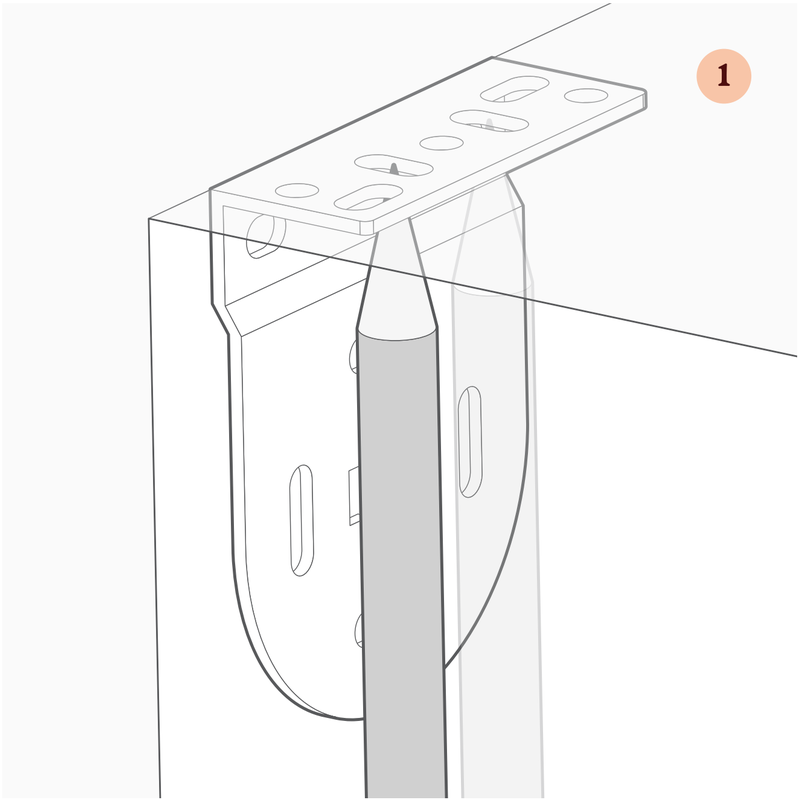

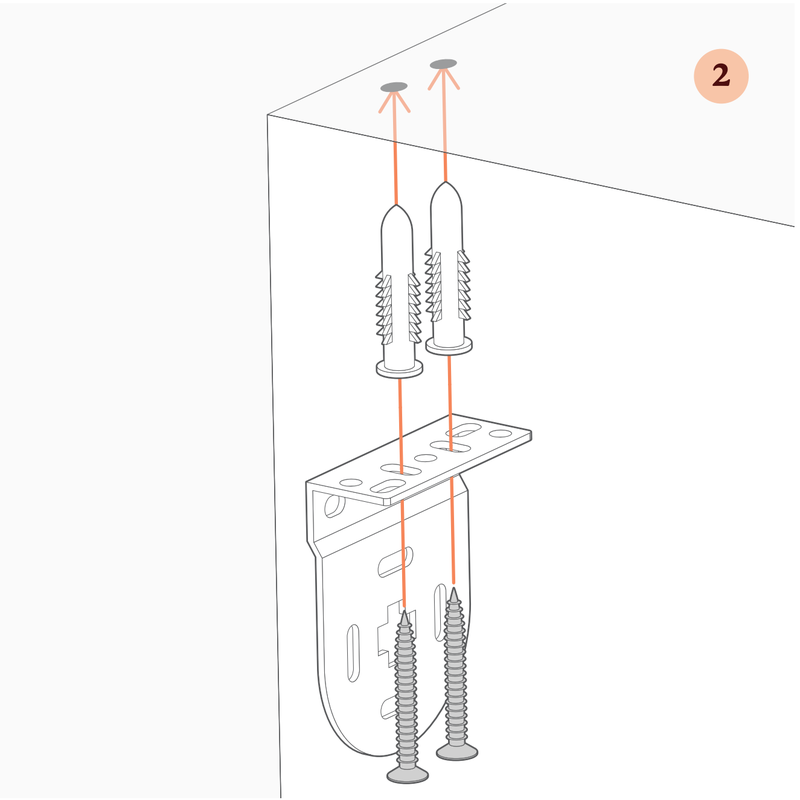

Hold the brackets in position up against the top of the recess and mark the locations of the screw holes on each bracket with a pen or pencil (1).

Drill a hole at each mark, then use the screws and wall plugs provided to secure the brackets in place (2).

Section 2 *Installing the Brackets* **- Side-Fixing**

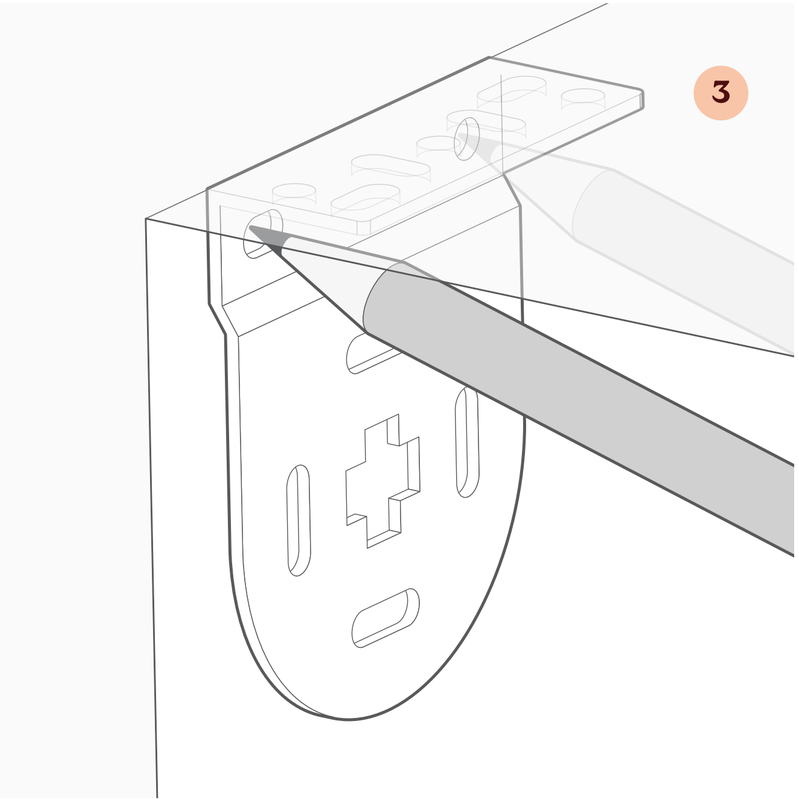

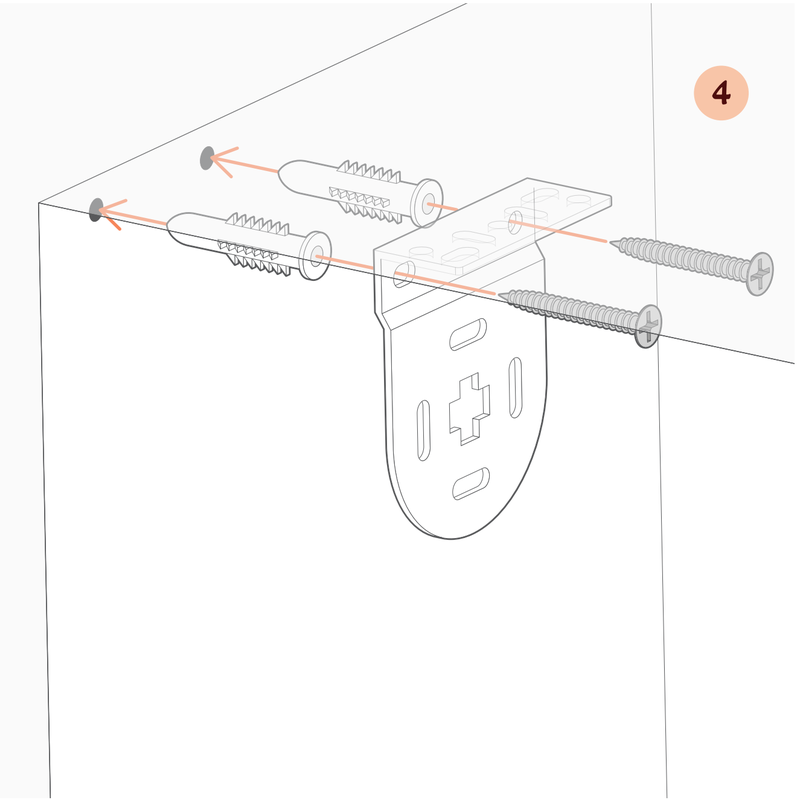

Hold the brackets in position up against the top of the recess and mark the locations of the screw holes on each bracket with a pen or pencil (3).

Drill a hole at each mark, then use the screws and wall plugs provided to secure the brackets in place (4).

Note, when drilling the screw holes you'll likely need to hold the drill up at a slight angle so the top of the drill doesn't dig into the top of the recess.

Section 2 *Installing the Brackets* **- Face-Fixing**

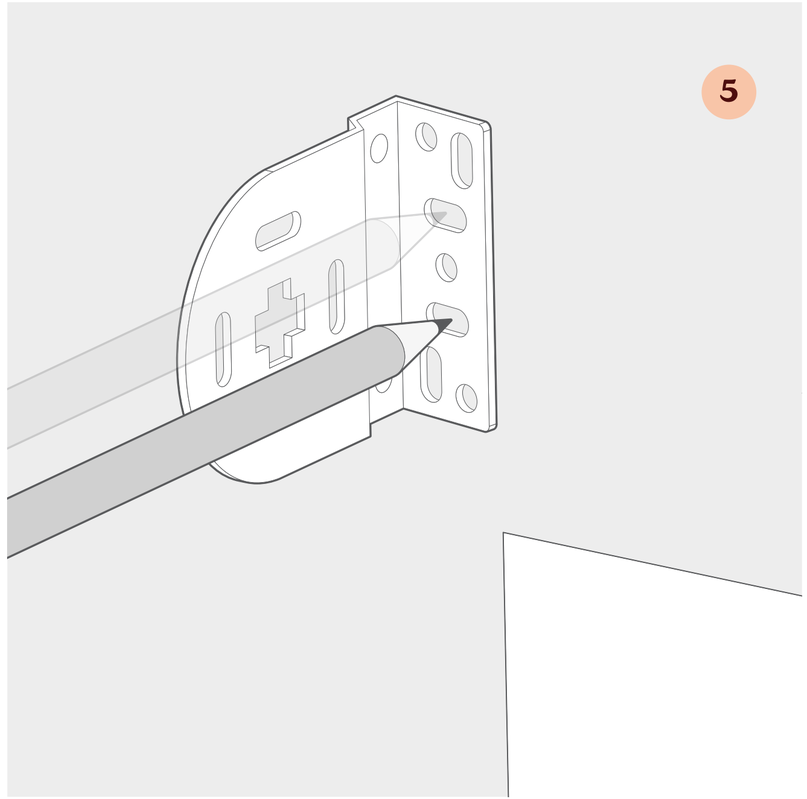

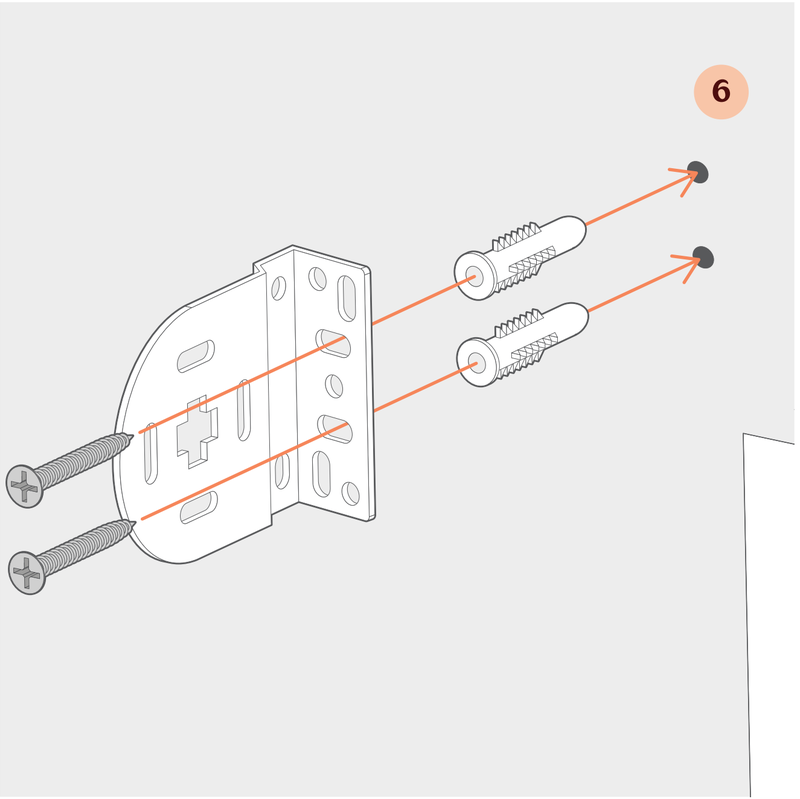

Hold the brackets in position up against the wall and mark the locations of the screw holes on each bracket with a pen or pencil (5). The bracket locations should match the top corners of where you took your measurements originally.

Drill a hole at each mark, then use the screws and wall plugs provided to secure the brackets in place (6).

Note: when positioning the brackets, take a moment to make sure that they're level, and that they're an equal distance each side from the edge of the recess.

Section 3 *Installing the Blind*

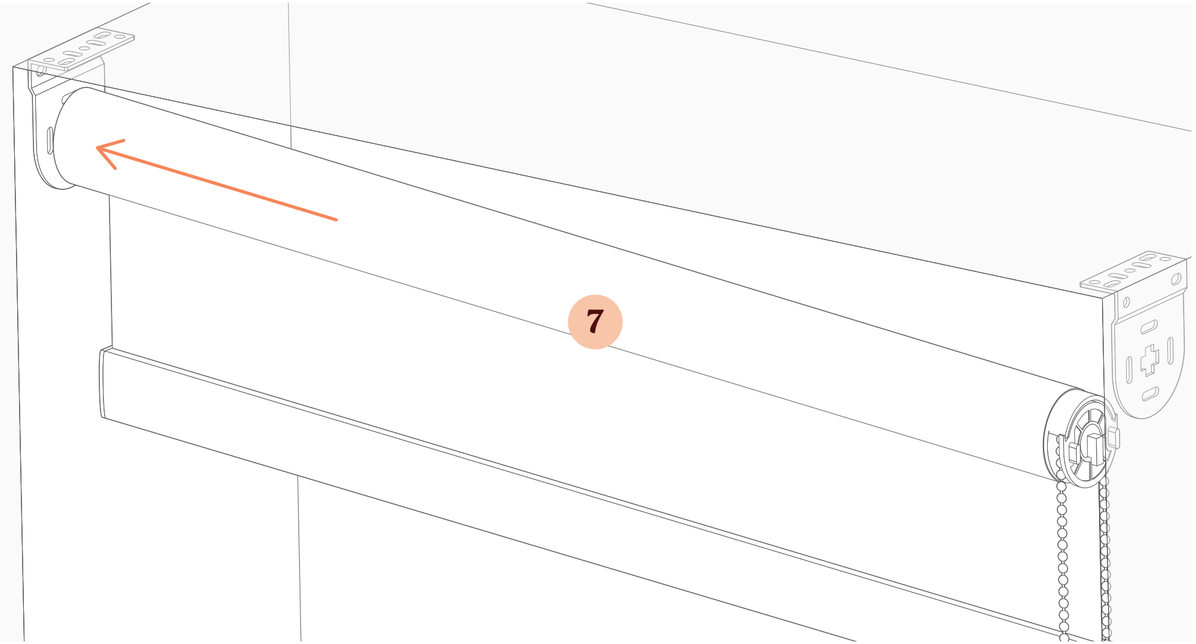

Lift the end of the blind opposite to the controls up to its bracket. Locate the depression pin in the centre cross of the bracket (7).

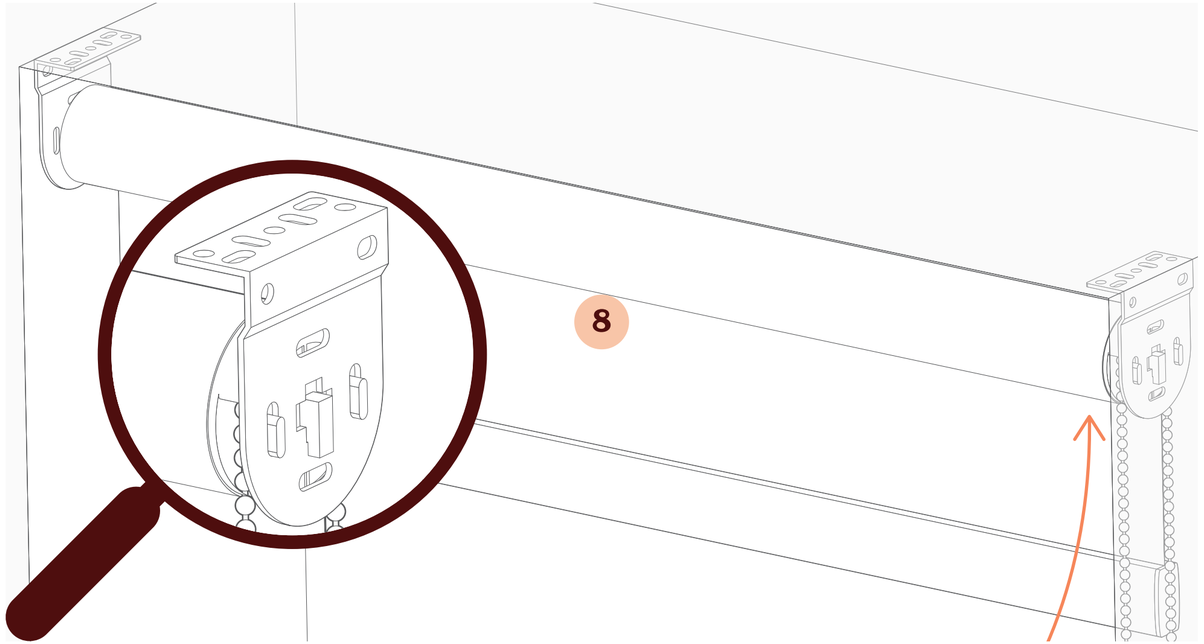

Now lift the control end of the blind and slot the rectangular studs on the control mechanism into the centre cross of the other bracket and pull down to lock it in (8).

Section 4 *Child Safety*

Young children can be strangled by loops in pull cords, chains, tapes and inner cords that operate the product.

To avoid strangulation and entanglement, keeps cords out of the reach of young children. Cords may become wrapped around a child's neck.

Move beds, cots and furniture away from window covering cords.

Do not tie cords together. Make sure cords do not twist and create a loop.

If you upgraded to electric, please skip this page

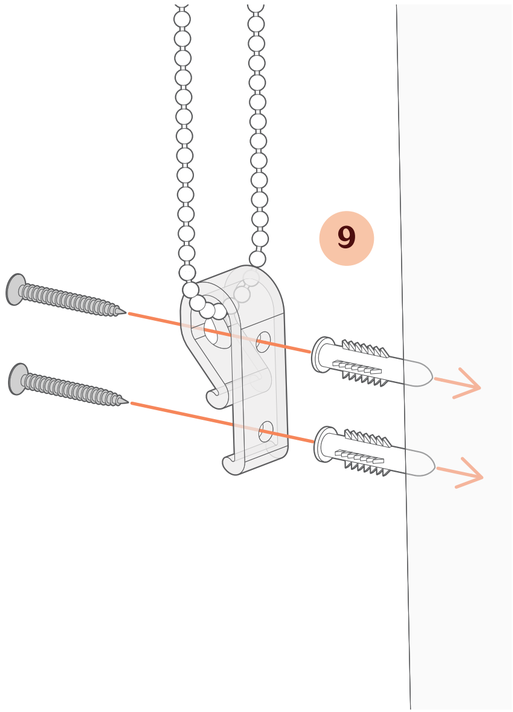

A child safety clip is provided, which is clipped onto the control cord already.

Holding the cord taut, mark the position of the clip on the wall with a pen or pencil, then drill your screw holes and use the fixings provided to secure the clip in place (9).

And that's it! Your beautiful new blind is installed and ready to enjoy...

Section 5 *SmartView Electric Blinds*

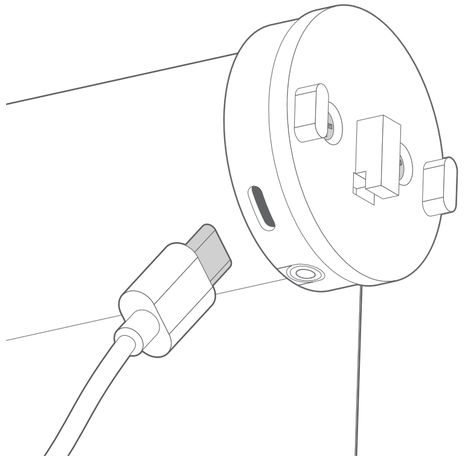

Once your blinds are installed we recommend plugging in the motor for each, to allow it to fully charge before use. Plug the charging cable (included) into the motor charging port and allow to charge until the LED on the charger plug turns green. Do not over-charge, as this can damage the battery.

On the front of the swing tag that comes with each blind, you'll find a handy QR code you can scan with your phone. Scan this to download the SmartView app - you'll be setting up your blinds in moments!

If you chose our solar charging upgrade, please continue to the next page of this guide.

Section 6 *Installing a Solar Charger* **- Upgrade only**

Tools required *for this section:*

- Handheld drill
- 4mm masonry drill bit
- Phillips screwdriver / driver bit
- Mallet / hammer
- Pen / pencil

Parts required *for this section:*

Solar Charger Brackets

USB-C Solar Charger

Screws & wall plugs

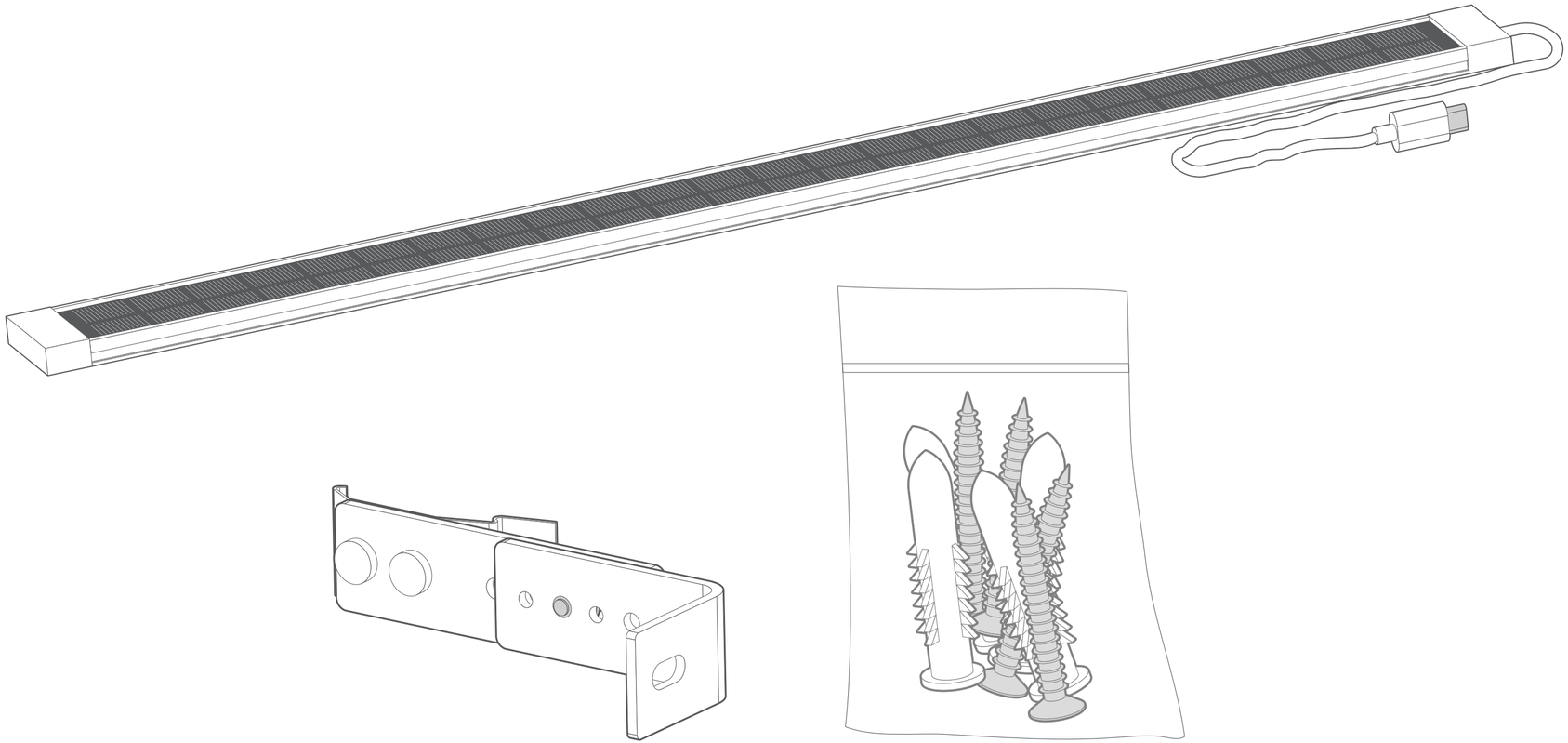

Section 6 *Installing a Solar Charger*

First, choose the method you'll be using to install your brackets:

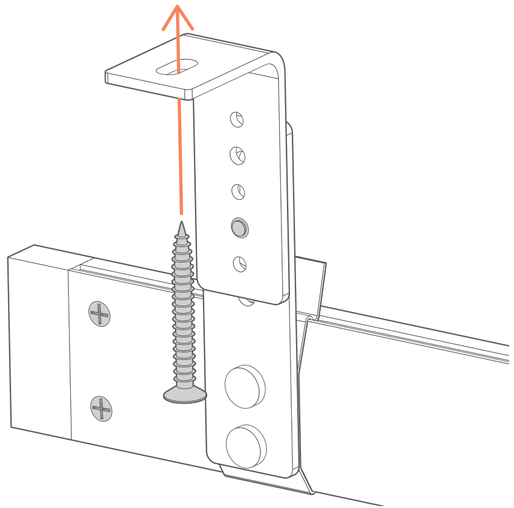

Top-fixing

Screw the charger's mounting brackets directly into the top of the recess. The charger will rest horizontally across the top of the window.

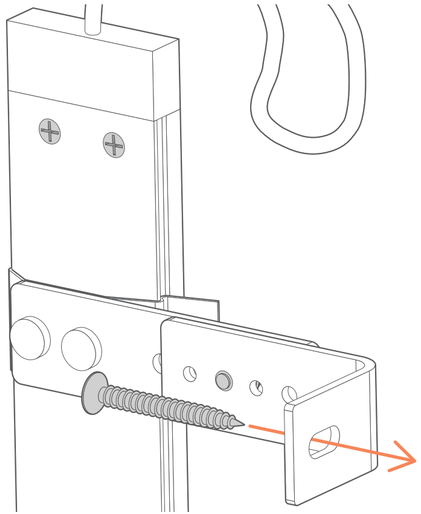

Side-fixing

Screw the mounting brackets into the side wall of the recess, so that the charger rests vertically at the side of the blind. Make sure that the brackets are installed on the side closest to the blind's motor in this case.

Section 6 *Installing a Solar Charger* **- Top-Fixing the Brackets**

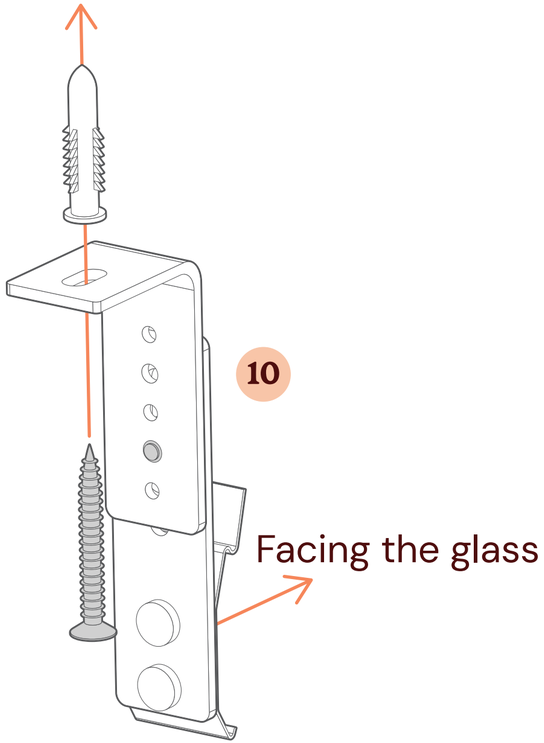

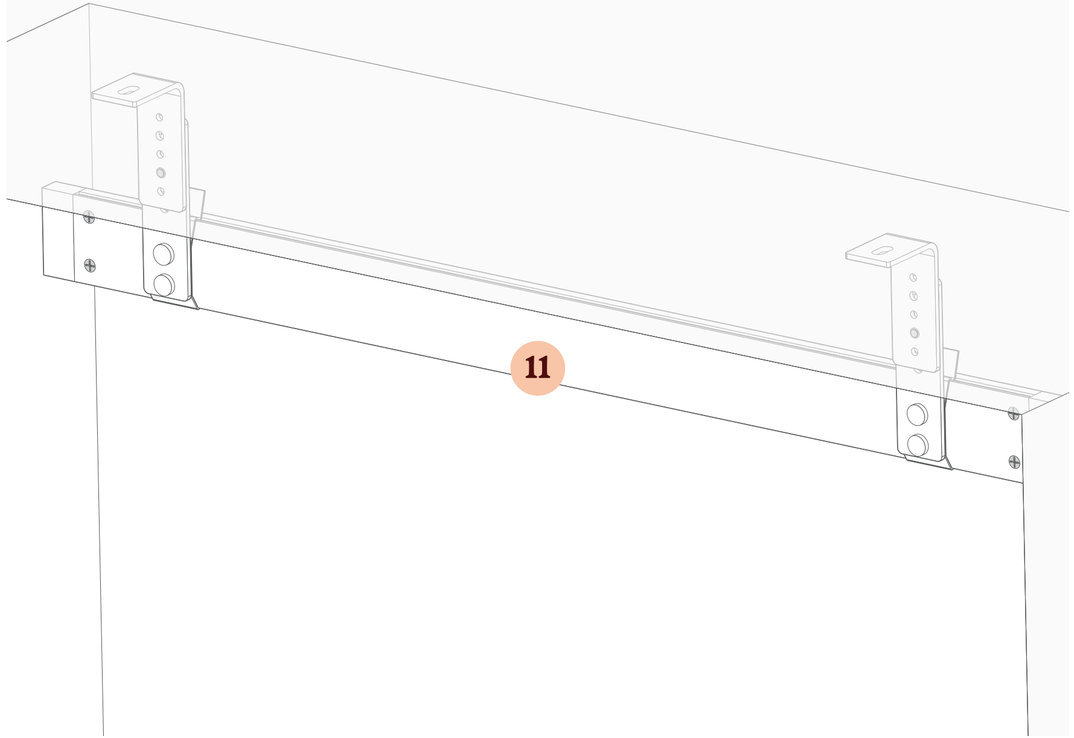

Hold the brackets up to the top of the recess and mark the screw hole in each with a pen or pencil. Use the fixings provided to secure the brackets in place. Make sure that the 'open' face of the brackets is facing the window (10).

The solar panel will clip into the open face of the brackets. The black panel on the charger should be facing the glass (11).

Section 6 *Installing a Solar Charger* **- Face-Fixing the Brackets**

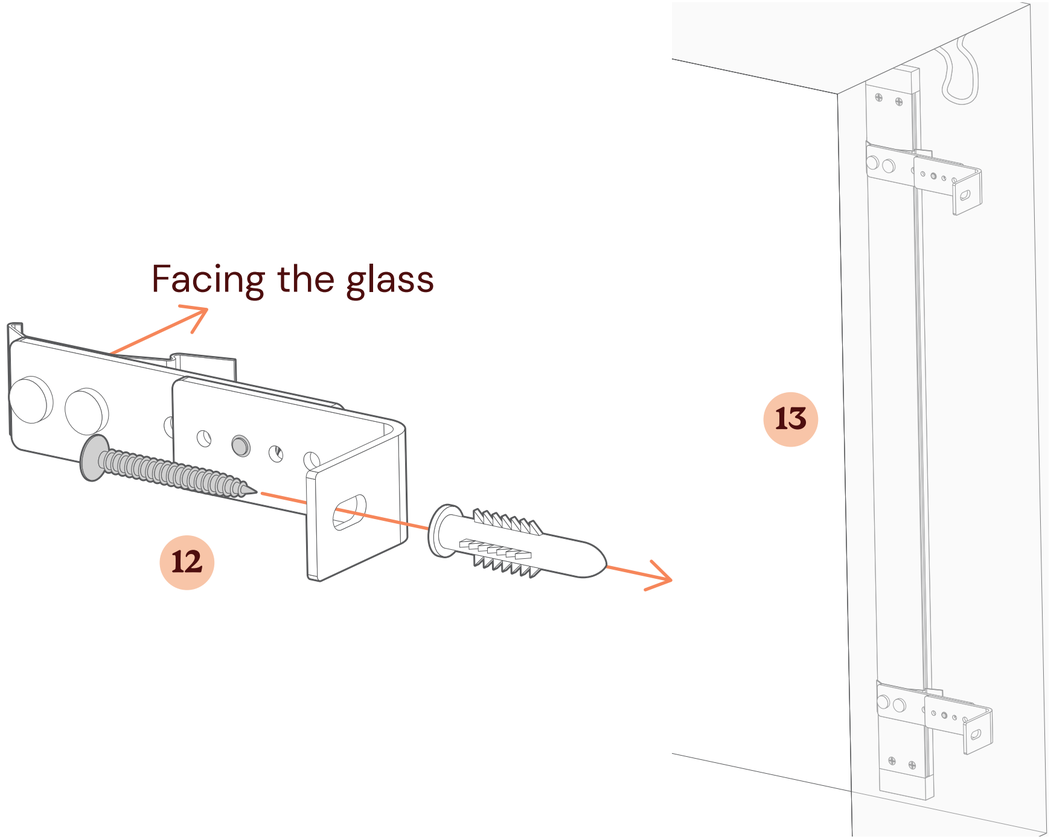

Hold the brackets up to the side of the recess and mark the screw hole in each with a pen or pencil. Use the fixings provided to secure the brackets in place. Make sure that the 'open' face of the brackets is facing the window (12).

Make sure that you fit the brackets on the same side of the window as the blind's motor, as the solar charger cable may not reach otherwise.

The solar panel will clip into the open face of the brackets. The black panel on the charger should be facing the glass (13).

Section 6 *Installing a Solar Charger* **- Charging**

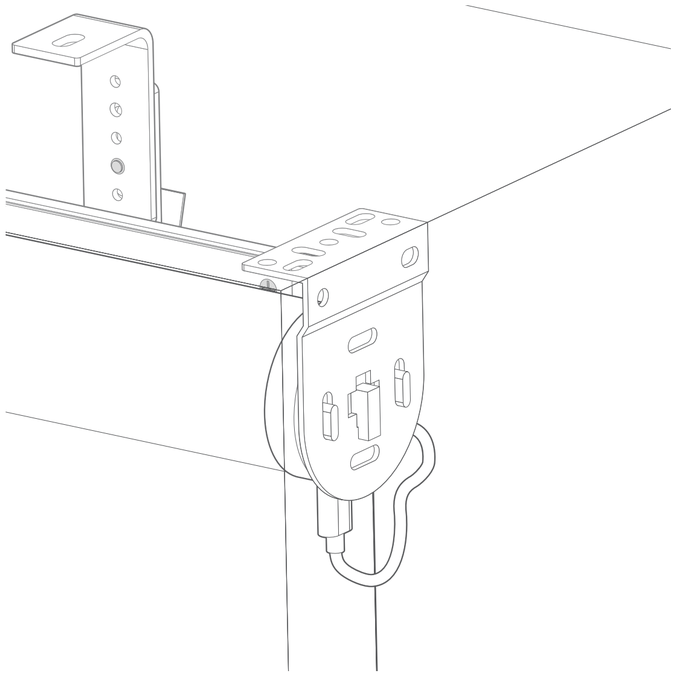

Once the solar charger is installed, it can be plugged into the motor's charging slot and left there permanently, as it will then provide a constant trickle of energy to the motor's battery and keep the charge topped up.

Recycle your electrical and electronic devices free at your local recycling centre. To find your nearest centre, visit the Recycle More website and type in your postcode.

Blinds2Go Ltd is part of the DTS scheme.